COPYRIGHT:
THIS DRAWING REMAINS THE PROPERTY OF SPM GROUP
AND IS PROVIDED FOR THE USE AS DESCRIBED
AND MAY NOT BE USED OR REPRODUCED IN WHOLE
OR IN PART WITHOUT WRITTEN PERMISSION.

www.brisdesign.com

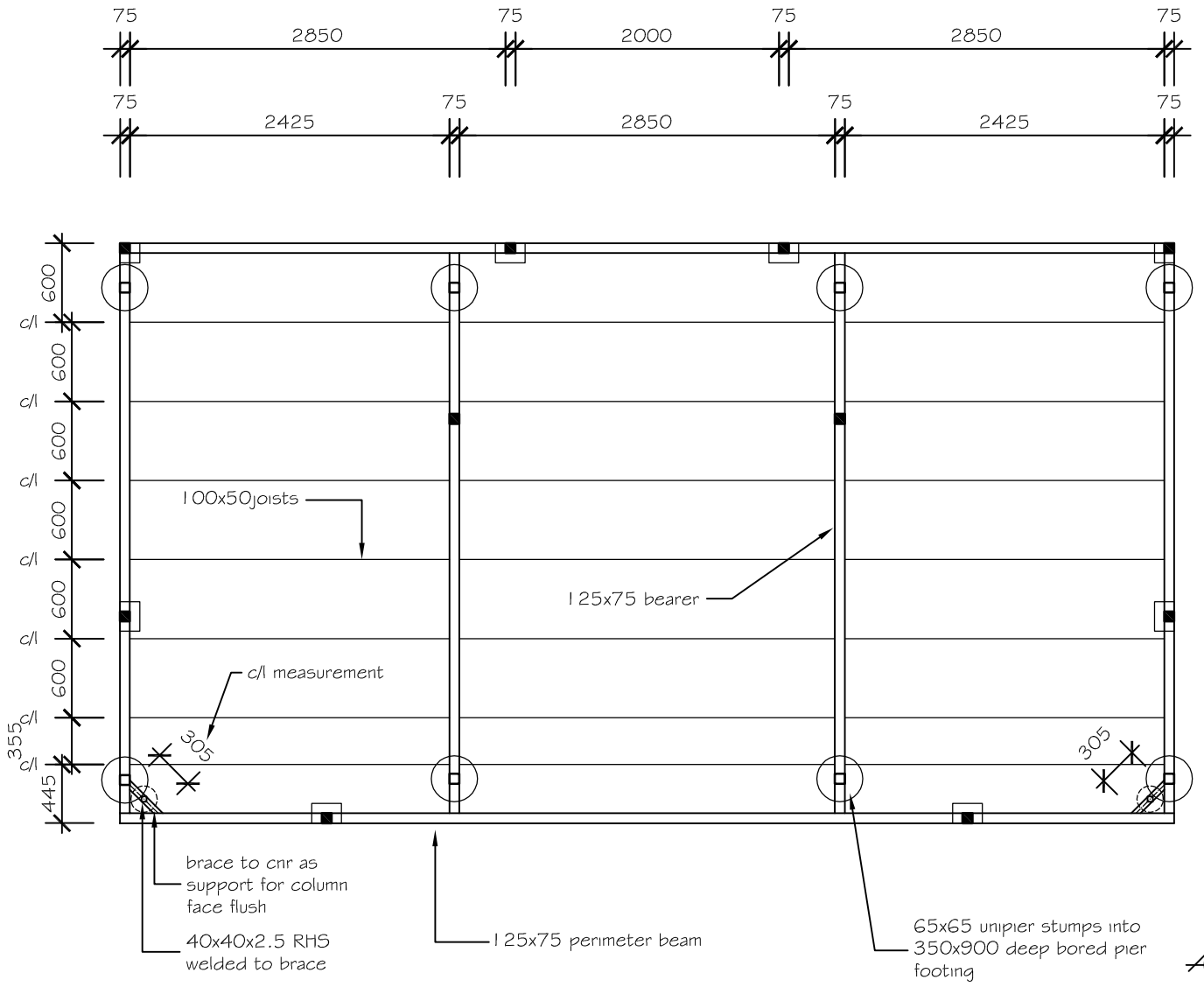

FLOOR FRAME

SCALE 1:50

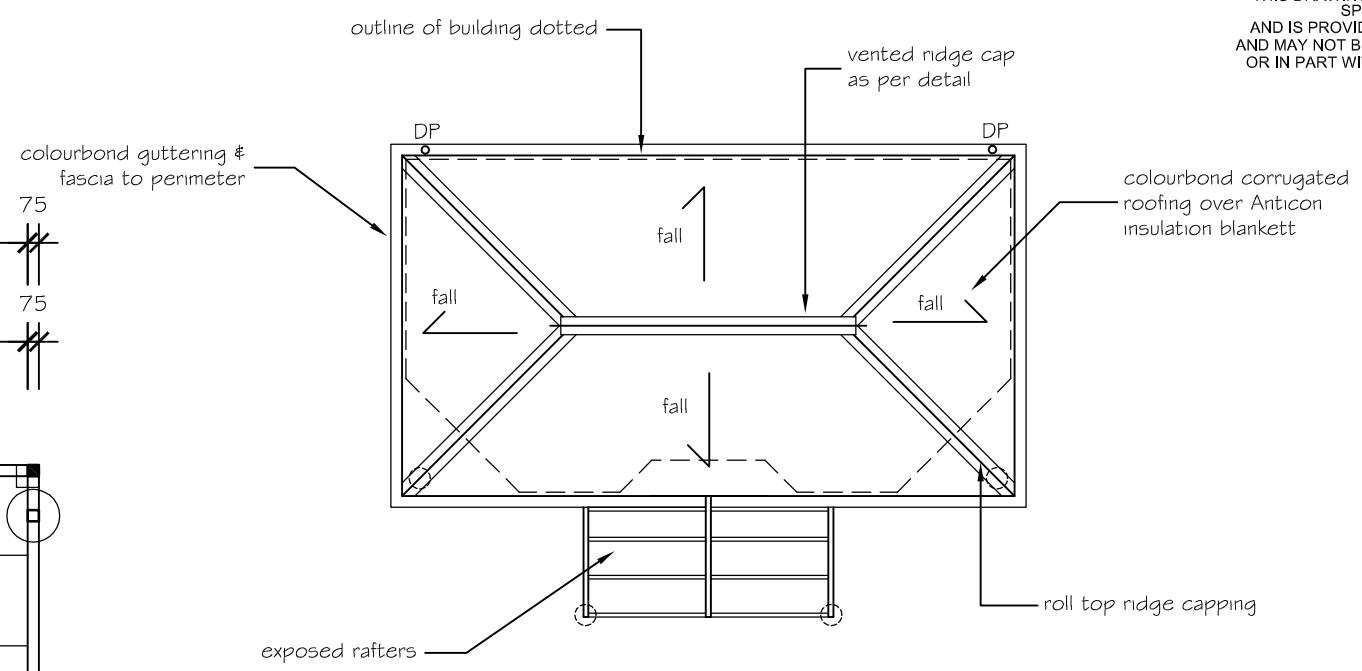

ROOF PLAN

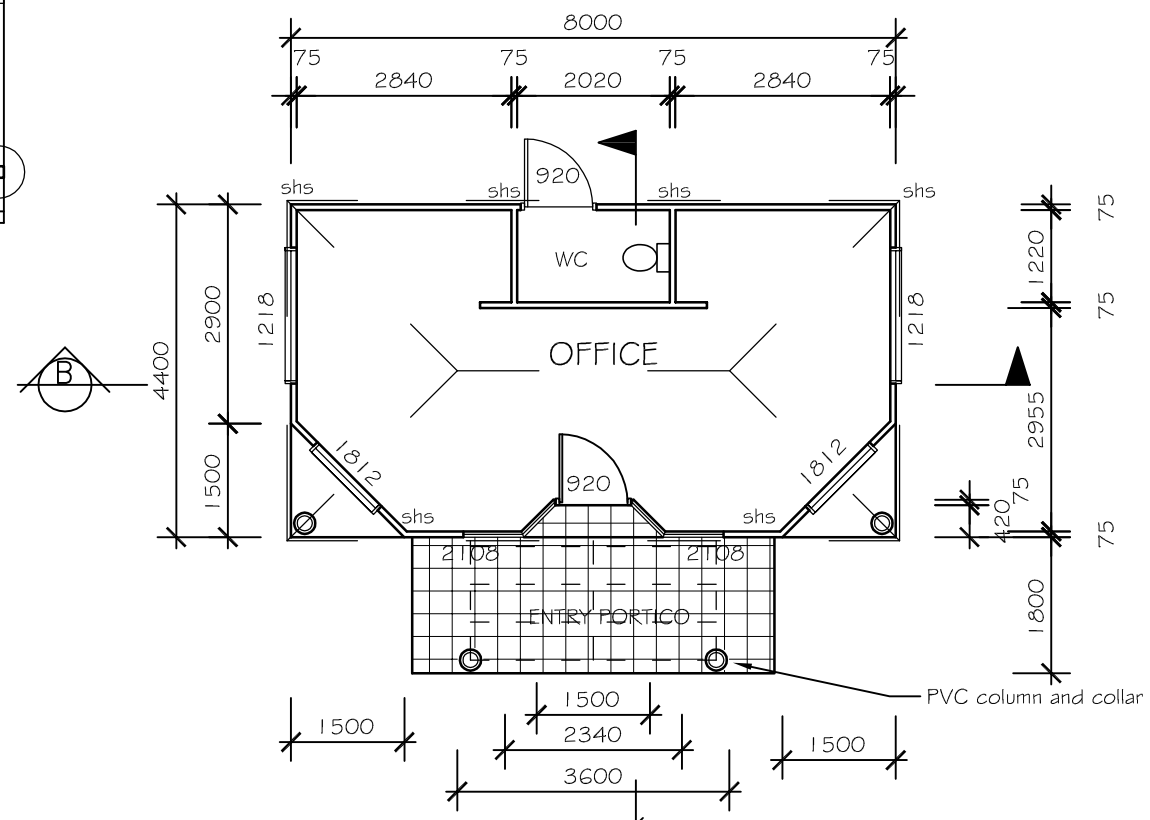

FLOOR PLAN

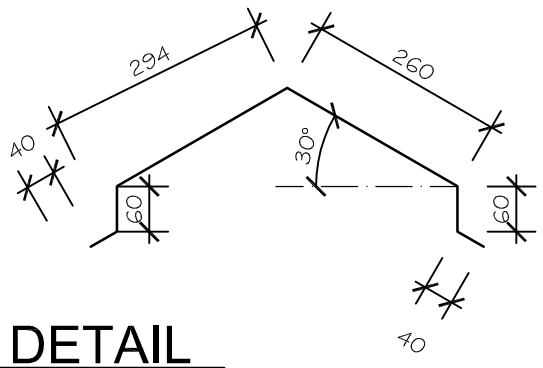

RIDGE CAP DETAIL

SCALE 1:10

0m 0.5 1.0 2.0 3.0 4.0

1:100 atA3 SCALE

PH 1300 888 009
PO BOX 1273
EAGLE FARM Q 4009
ABN: 90 072 761 212

"SPACEMASTER" 8x4.4 SUITE

ALL WORK SHALL COMPLY WITH THE PROVISIONS OF THE BUILDING CODE OF AUSTRALIA, AUSTRALIAN STANDARDS AND ANY BYLAWS OR REQUIREMENTS OF LOCAL AUTHORITIES.

USE FIGURED DIMENSIONS ONLY. DO NOT SCALE. REPORT ANY DISCREPANCIES IMMEDIATELY FOR CLARIFICATION. VERIFY ALL DIMENSIONS ON SITE PRIOR TO ORDERING OR FABRICATION.

FLOOR PLAN 01